Diritti riservati All rights reserved

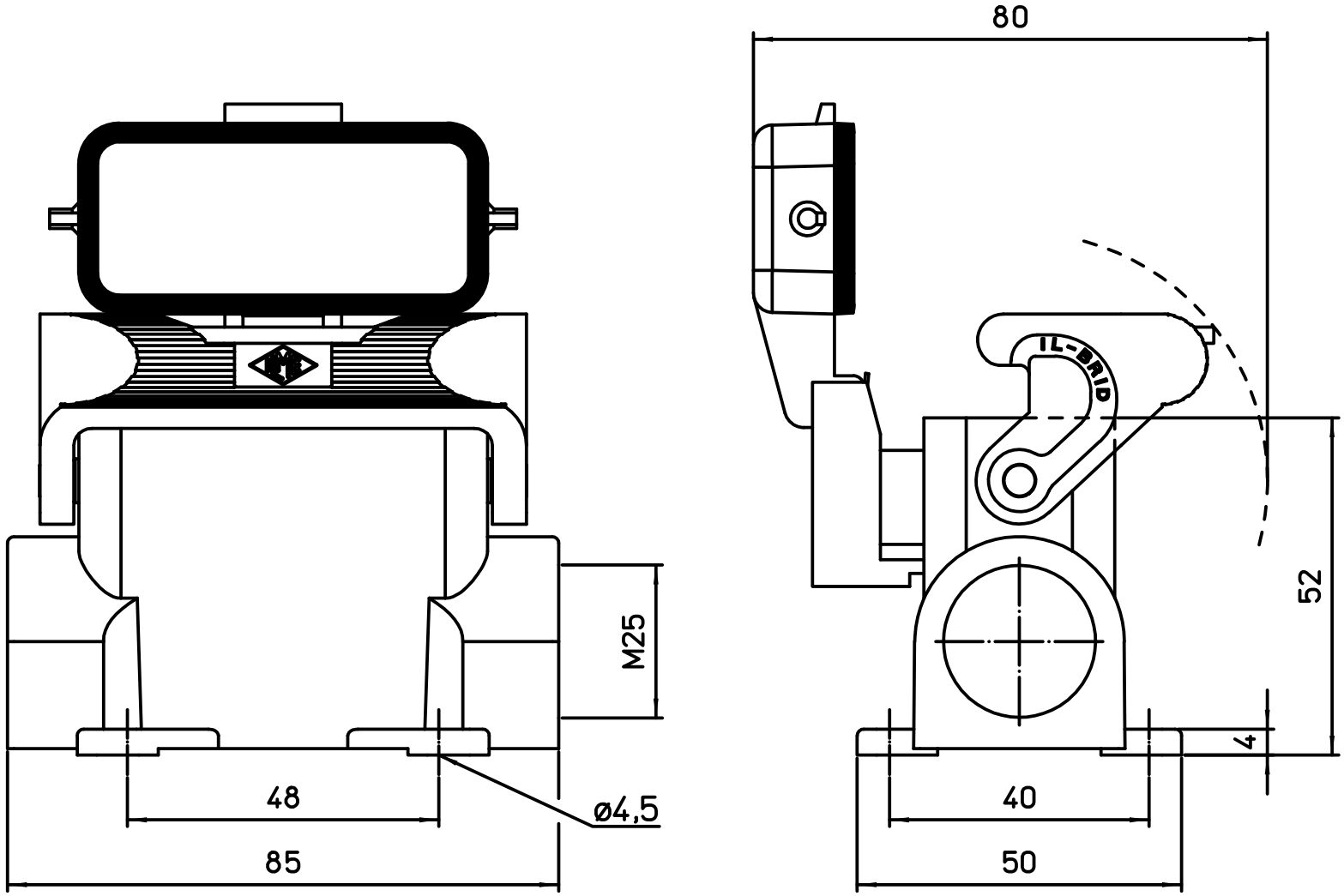

dimensions in mm	
Date	22/11/18
Sign.	D.Cominelli

MZP 15 LS25

Surface mounting housing with single lever and cover, M25

Scale 1:1